Francis SEARCHLIGHTS

L560 Issue 5
Tungsten Halogen
Manual operation

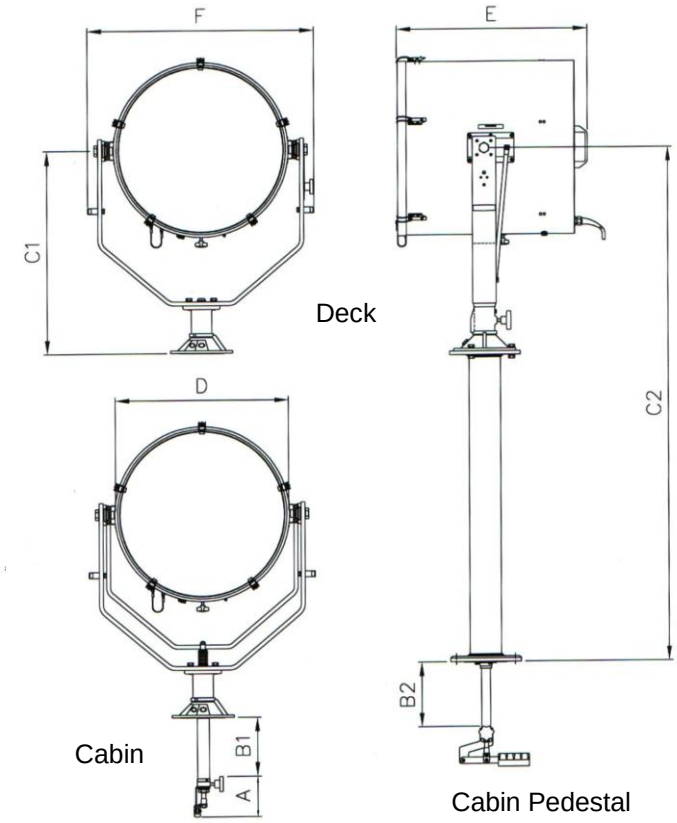

APPLICATION

The FRANCIS Lite range of searchlights incorporate the design features required to successfully operate searchlights in the most demanding product operating environments on land and sea.

The Lite range is a cost effective and well made range of searchlights with external focus adjustment. These units are particularly suitable for use on patrol craft, custom vessels and general marine applications.

SPECIFICATION

- Toughened super clear Optiwhite front glass.
- Parabolic super pure aluminum reflector
- Constructed from marine grade materials and fixings
- Powder coated and stove enamel paint finish.
- Pan rotation 450°
- Deck/Deck Ped Tilt elevation control +40° to -40°.
- Cabin/Cabin Ped Tilt elevation control +30° to -25°
- Optional Heater fitted in barrel
- Operational temp -50°
- Tungsten halogen lamp
- Light shield to prevent unwanted glare & stray light
- External lamp focus, 4.8° spot to 15° flood.
- Sealing – IP66 Searchlight
- Modular design allowing customer to modify configuration.
- Searchlight weight Deck 23.5kgs, Pedestal 5Kgs, Cabin Control assy 2.8Kgs, Cabin Pedestal assy 3.8Kgs
- Special B1/2 & C2 dimensions available on request.

VAC	Lamp life	Range @ 1 Lux	PBCP X 1000	Div	Watts	Lamp No
115v	400 hrs	2450m	4850	6.3°	3000w	D9843
230v	400 hrs	2450m	4850	6.3°	3000w	D22559
115v	400 hrs	2030m	3900	4.8°	2000w	D1823
230v	400 hrs	2030m	3900	4.8°	2000w	D4604

ALL DIMENSIONS IN MILLIMETRES

Base fixing details:
Deck & Cabin 3 holes Ø11.0 equi-spaced on a 174 PCD
Deck Ped & Cabin Ped 4 holes Ø12.5 equi-spaced on a 270 PCD,
Central Hole Cabin Ø52 & Cabin Ped Ø95

Part Numbers

Type	Supply	Part No
L560D Deck 2 & 3kw	115/230v	A2969
Cabin Control Assy		C23348-01
Pedestal Deck		C22800-79
Cabin Pedestal Control Assy		C22786-01

Dimensions

A	B1	B2	C1	C2	D	E	F1
130	190	210	659	1663	560	616	731

For more information contact:

Francis Searchlights Limited
Union Road, Bolton, BL2 2HJ, UK
Tel 44 (0) 1204 558960 Fax 44 (0) 1204 558979
Email sales@francis.co.uk Web site www.francis.co.uk